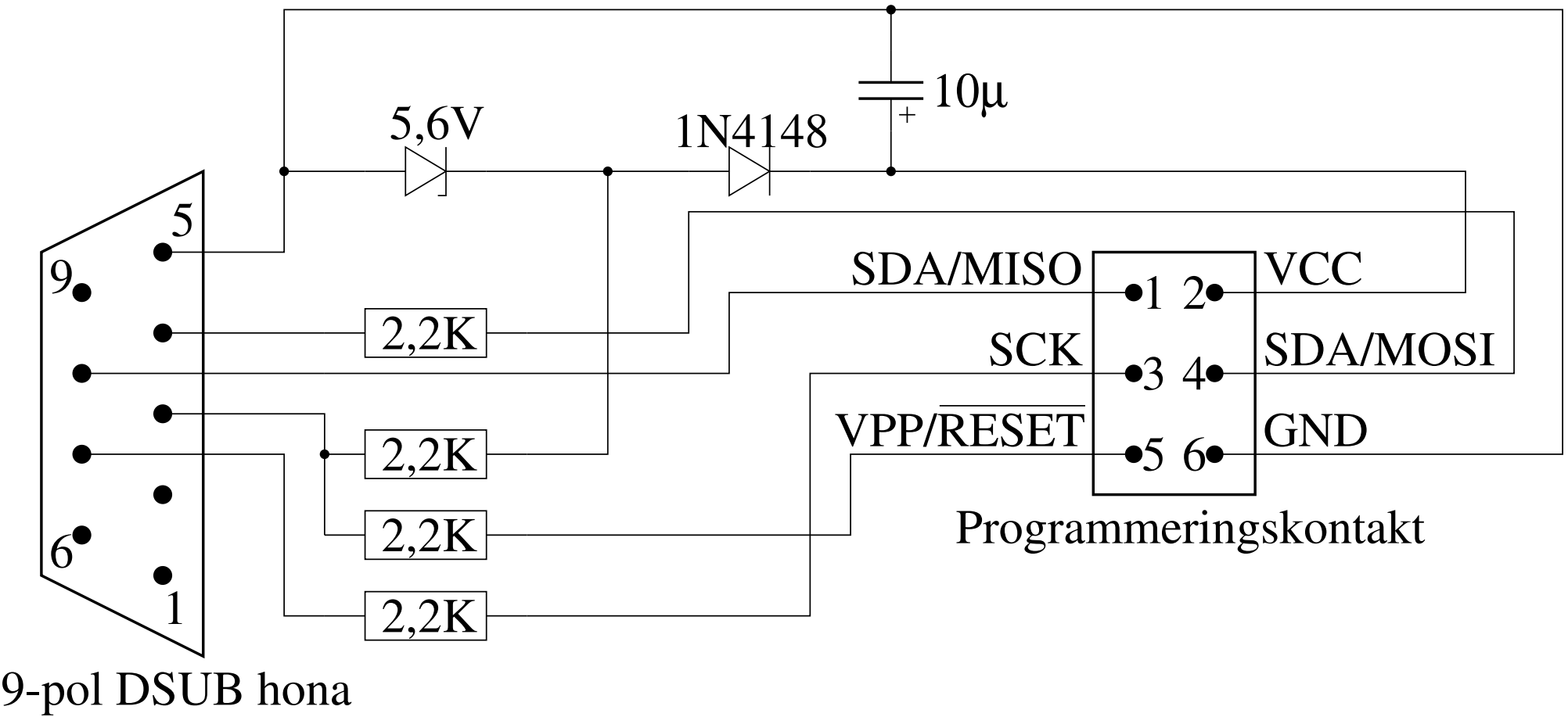Programmeringsadapter